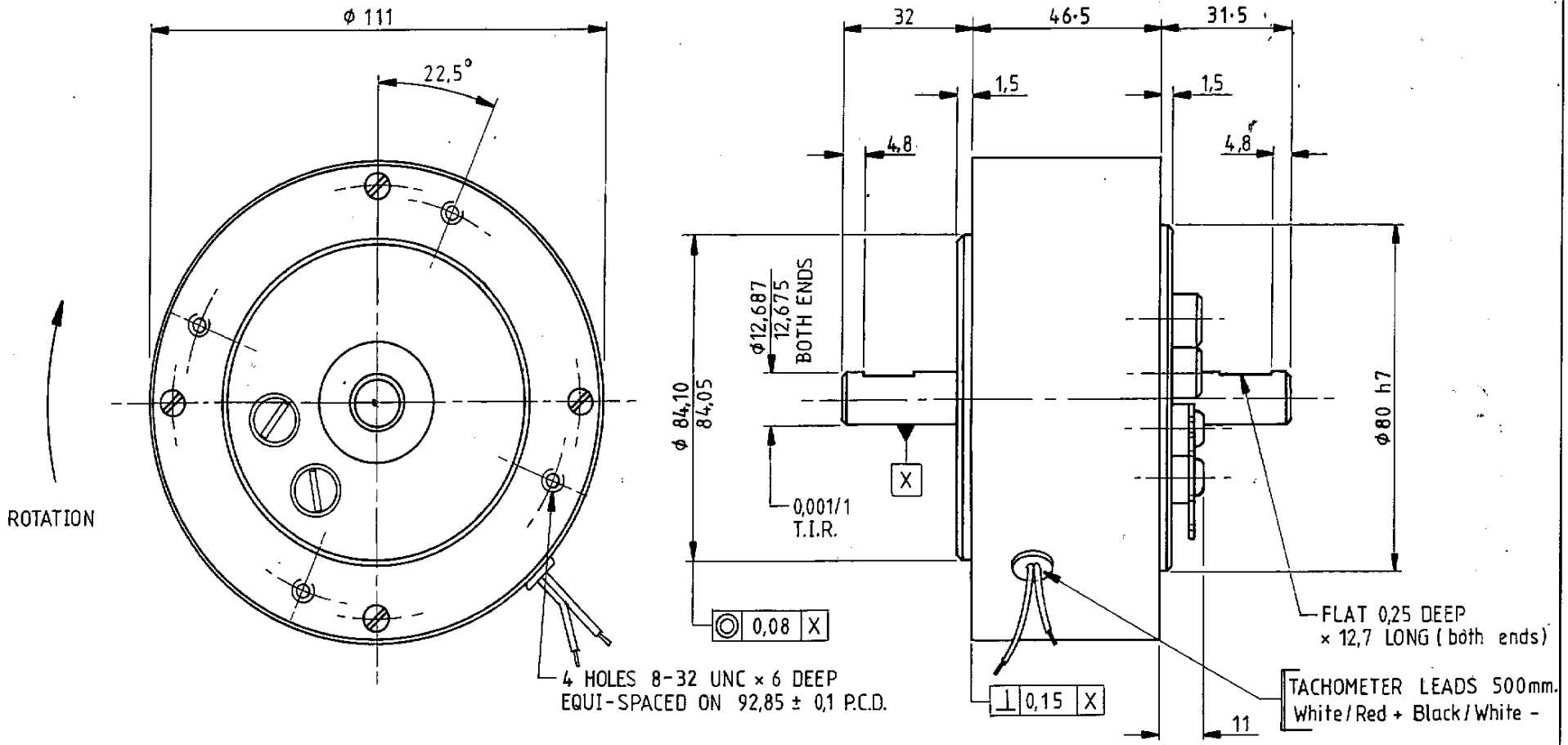

MOTOR RATINGS

VOLTAGE	23 Vdc
SPEED	3000 r.p.m.
CURRENT	8·6 Amps
TORQUE	32·5 Ncm
POWER	102 Watts

REF. ELECTRICAL SPECIFICATION Nº 012

MOTOR CONSTANTS

VOLTAGE	(Ke)	4·5 V/1000 r.p.m.
TORQUE	(Kt)	4·3 Ncm/Amp
DAMPING	(Kd)	0·59 Ncm/1000 r.p.m.
FRICTION TORQUE	(Tf)	4·2 Ncm
TERMINAL RESISTANCE		0·85 Ohms

TACHOMETER

OUTPUT	2·25 V/1000 RPM
RIPPLE	4% p-p at 1000 RPM

NOTES

1) Max, radial load 140N at rated speed
2) Max, end play under reversal of 25N = 0·1mm

REMOVE BURRS & SHARP EDGES, DIMENSIONS APPLY AFTER PLATING

ISSUE	DATE	ALT. SH.	INITIALS	ISSUE	DATE	ALT. SH.	INITIALS
2	26/10/88	CR 918	S.A.H.				
1	21-7-88						

CHECKED: Checked by Simon Brockway
TRACED
DRAWN
SCALE

THIRD ANGLE PROJECTION

DIMENSIONS IN mm

TOLERANCES
NO DECIMALS ±
ONE PLACE DECIMALS ±
TWO PLACES DECIMALS ±
ANGLES ± ½°
UNLESS STATED OTHERWISE

PRINTED MOTORS LTD BORDON, HANTS.

FINISH

TITLE: OUTLINE DRG. G9M4T

MATERIAL

DRAWING NUMBER: 2017